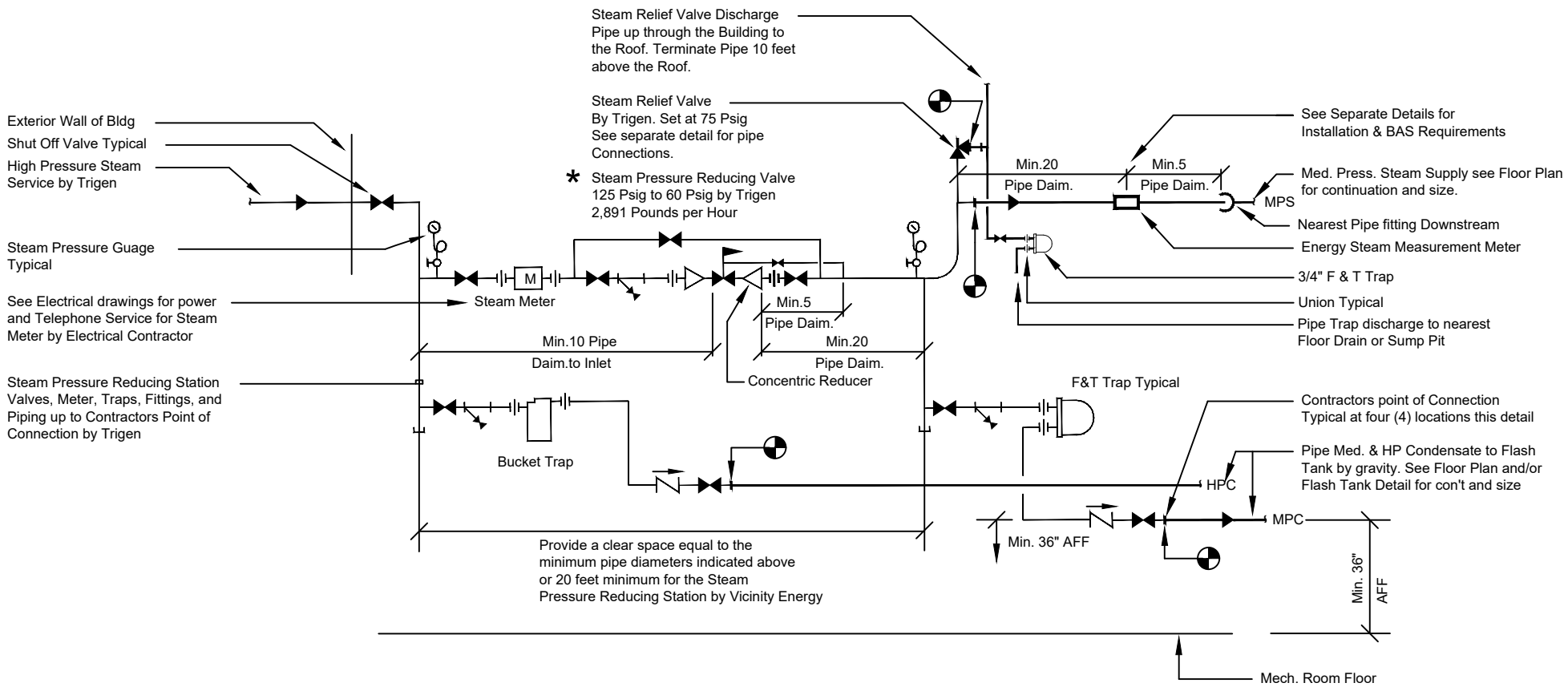

* Engineer to Edit Lbs / Hr to match Building Heat Load

Note: See Valve and Fitting Installation Detail for Additional Requirements

Detail : Building Steam Service Single Stage

No Scale

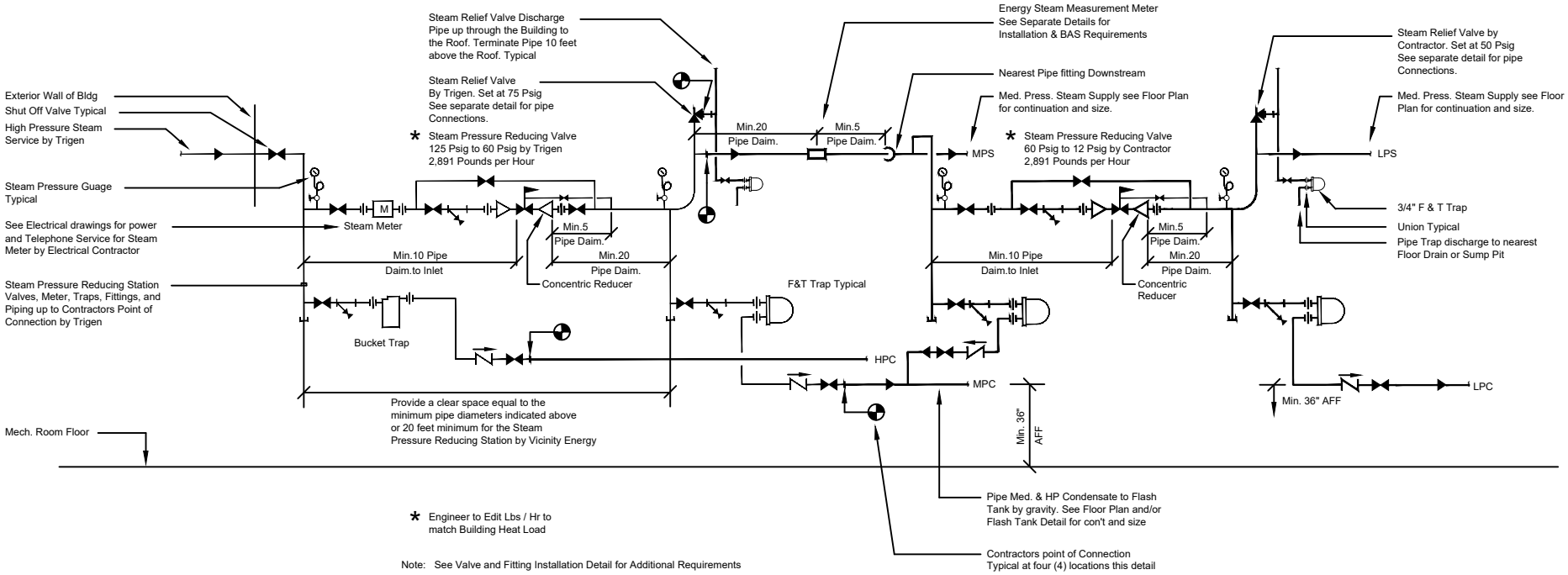

* Engineer to Edit Lbs / Hr to match Building Heat Load

Note: See Valve and Fitting Installation Detail for Additional Requirements

Detail : Building Steam Service Two Stages

No Scale